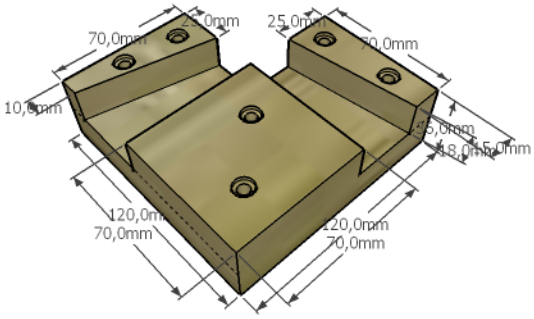
70,0mm
25,0mm
70,0mm
10,0mm
15,0mm
18,0mm
15,0mm
120,0mm
70,0mm
120,0mm
70,0mm